90-HF

Touchless Non-Recessed Drinking Fountain with "Hands Free" Sensors

Fountain bowl, cover plate, optional gooseneck bottle filler and standard access panel shown in #4 satin standard stainless steel finish with "Hands Free" sensors, label and bubbler in mirror finish

Dimensions in drawing subject to options selected.

Features

- 10½" diameter, 16 ga. fountain bowl
- Long-lasting, durable stainless steel water dispenser, promotes refilling of water bottles
- "Hands Free" sensors help prevent germ transmission and water waste
- One-piece cover plate with no seams or exposed edges
- No plastic parts
- Manufactured with lead-free materials
- Integral drain in bowl for ease of cleaning
- ¼" steel support arm and wall bracket capable of supporting 500 lbs.
- Matching cover plate finishes including unlimited powder coat colors
- Options include bottle fillers, bottle counters, finishes, bubbler valves and much more...

Recommended Add-ons

Chiller

Equip your fountain with a Filtrine point-of-use or remote chiller to cool your drinking water. We can help you select the most economical chiller model to fit your demand.

Purifier

Ensure that your drinking water is of the highest quality by adding a Filtrine Taste Master® purifier cabinet underneath the fountain or a remote purification system serving all fountains in the building.

Top View

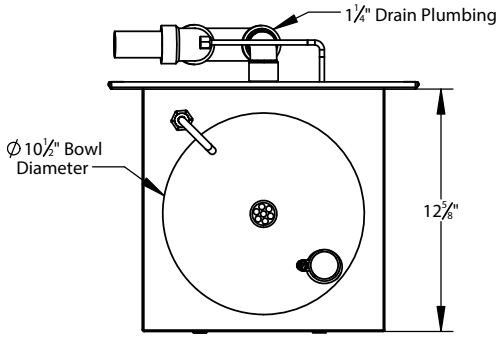

Side View

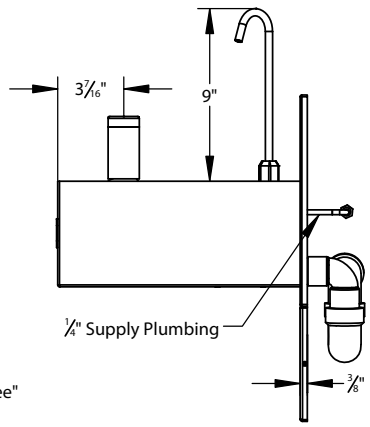

Front View

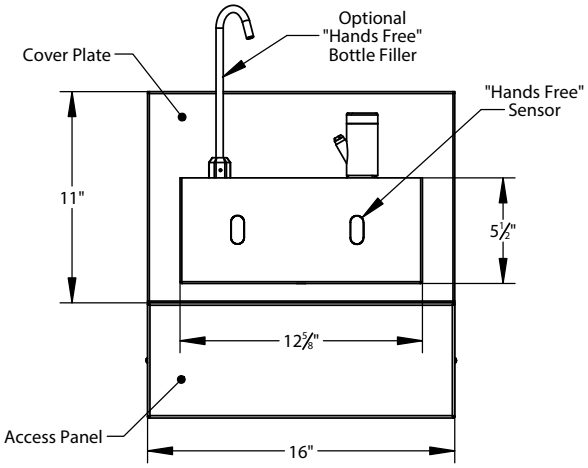

"Hands Free" Components Include:

- "Hands Free" Sensor
- Electrical Box
- Battery Pack*
- Control Module
- Cartridge Regulator

* [4] lithium AA batteries included

For options, finishes and more see page 2

Filtrine Mfg. Co. · 15 Kit St. Keene, NH 03431 USA
800-930-3367 · 603-352-5500 · FAX (603) 352-0330
www.filtrine.com · drinkingwater@filtrine.com

MADE IN USA

FILTRINE IS ISO 9001:2015 CERTIFIED
PRODUCT LINE ETL APPROVED CE MARK AVAILABLE

COMPLIES WITH LEAD NSF/ANSI 372

90-HF [EB]
REVISED
1/12/2021

Filtrine Drinking Water Non-Recessed Fountain Options

[S] - Standard
♿ - ADA compliant

Access Panel

6" Standard Height or Specify: _____in

- Included with all "Hands Free" fountains
- Material, finish and width to match cover plate
- Includes mounting brackets for simple wall installation

Cover Plate

☐11" Standard Height ☐Other Height _____in

☐ **Labels** (Choose one or both [S])

☐

☐

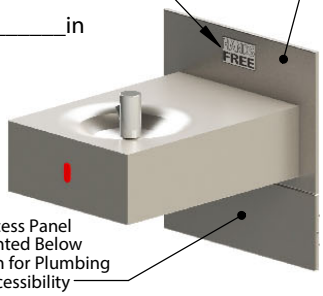

☐Optional "Hands Free" Gooseneck Bottle Filler

Model CC-153-STV

- Mounted on deck of lowest fountain bowl
- "Hands Free" sensor features automatic shutoff with [30] second delay
- Supply plumbing and mounting fitting for filler provided by Filtrine

☐*Tamper resistant screws prevent vandalism*

Vandal Proof Options

☐Optional "Hands Free" Vandal Proof Bottle Filler

- Mounted 10½" above lowest fountain bowl.
- Comes standard with bottom security panel assembled with tamper proof screws.
- Requires larger cover plate and mounting plate.
- Supply plumbing and mounting tongue for filler provided by Filtrine.

☐Optional Tamper-Resistant Screw

Tamper-Resistant Set Screw Secures Bubbler to Fountain

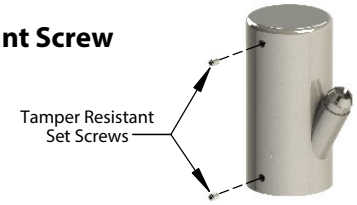

☐Optional Security Panel

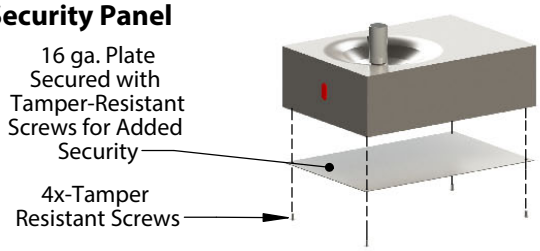

☐Optional F-502 Bubbler

Alternative "Hands Free" Bubbler to the Default F-503 Bubbler

☐Optional F-502 Tamper Resistant Screw

Tamper-Resistant Set Screw Secures Bubbler to Fountain

Fountain Finish (Check One)
☐Satin Stainless [S] ☐Mirrored Stainless ☐Powder Coat _____ ☐Satin Bronze ☐Mirrored Bronze ☐Statuary Bronze ☐Oil-Rubbed Bronze

Optional Cover Plate Finish (Check One)
☐Satin Stainless [S] ☐Mirrored Stainless ☐Powder Coat _____ ☐Satin Bronze ☐Mirrored Bronze ☐Statuary Bronze ☐Oil-Rubbed Bronze

Stainless

Satin Stainless Steel [S]

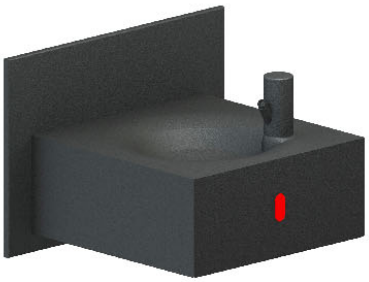

Black Powder Coat

Mirrored Stainless Steel

White Powder Coat

Bronze

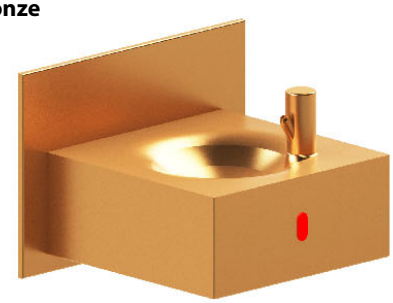

Satin Bronze

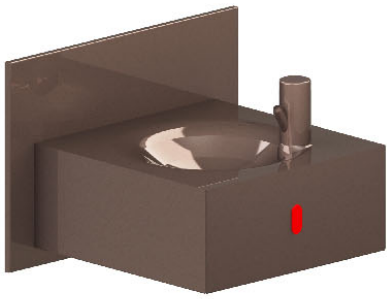

Statuary Bronze

Filtrine Mfg. Co. · 15 Kit St. Keene, NH 03431 USA
800-930-3367 · 603-352-5500 · FAX 603-352-0330
www.filtrine.com · drinkingwater@filtrine.com

MADE IN USA

FILTRINE IS ISO 9001:2015 CERTIFIED
PRODUCT LINE ETL APPROVED CE MARK AVAILABLE

COMPLIES WITH LEAD NSF/ANSI 372

90-HF Installation Drawing

Mounting Plate Details (Front)

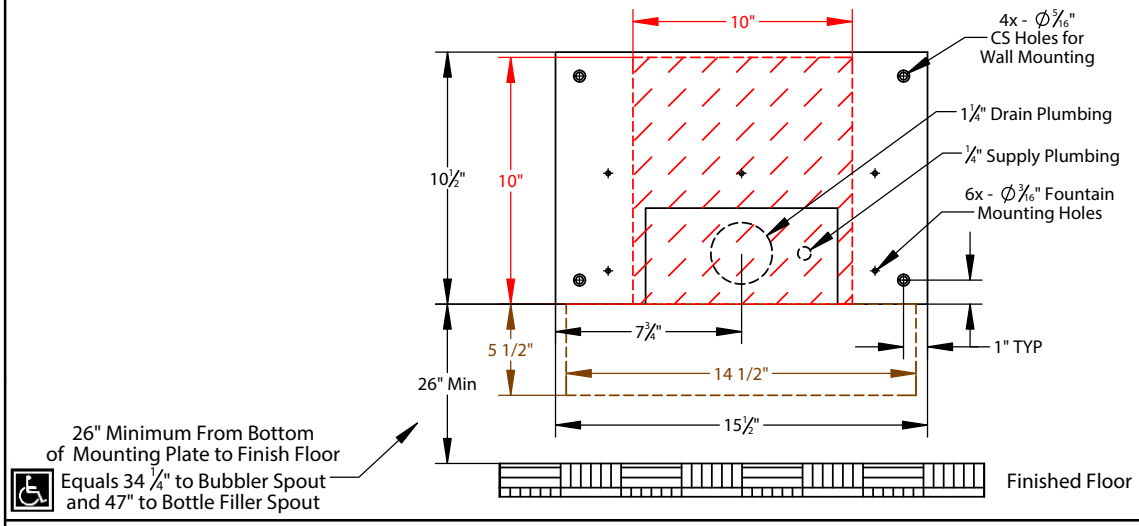

Approximate Rough-In Dimensions (hatched, left)

Model	Height	Width
Standard Plate	10"	10"

Approximate Access Panel Rough-In Dimensions (outlined, left)

Model	Height	Width
Standard Panel	5½"*	14½"

*If height specified, rough-in height will be ½" less than specified height

All views shown are for typical installation of 90-HF. Views, dimensions and diagrams may change for specific installation requirements.

Exploded On-Wall Installation View 90-HF with Access Panel

Typical Assembly Instructions (Always Install Per Local Code)

1. Cut rough opening for fountain and access panel (if included) as shown above.
2. Run drain piping to the rough opening and install drain trap per local code
3. Run supply water lines to bottom of rough opening.
4. Fasten mounting plate over rough opening with 5/16" countersunk lag bolts with bottom of plate 26" above the floor to meet ADA fountain height requirements.
5. Install cover plate over the mounting plate.
6. If included, measure, mark and install the access panel "L" brackets with #8-32 screws and align access panel to cover plate with alignment pins.
7. Install the model 90-HF fountain using screws provided.
8. Connect drain line to slip coupling and building supply plumbing to ¼" fountain plumbing. Install AA batteries.
9. Activate sensor to test water flow. Adjust flow rate by turning the white screw head on the regulator cartridge (turn clockwise to decrease flow, counterclockwise to increase flow).
10. To adjust sensor distance, turn the yellow phillips head screw on control module (turn clockwise to lengthen distance).

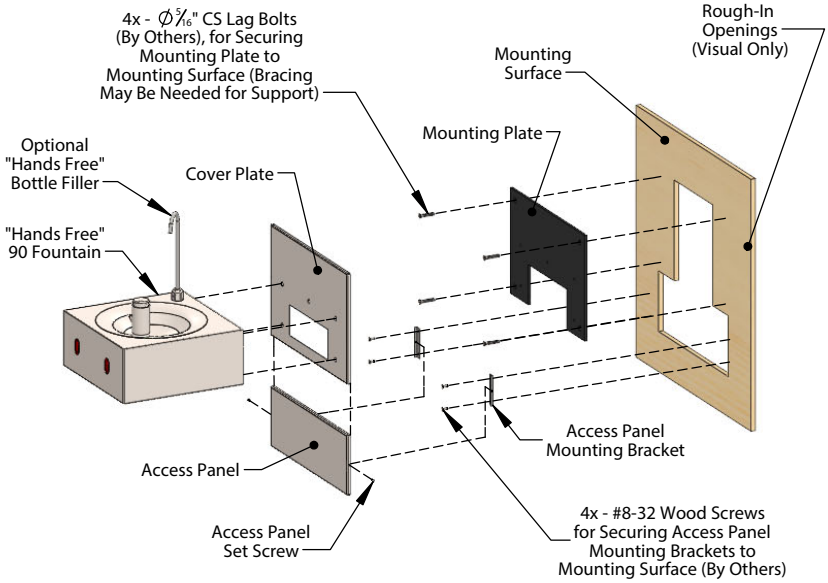

Access Panel Mounting Brackets Installation Details

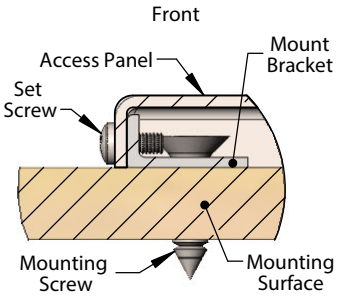

Detailed View of Top of Mounting Bracket Assembly

Typical Drain Plumbing Detail (In-Wall Plumbing Provided By Others, Install Per Local Code)

Front View (Cropped)

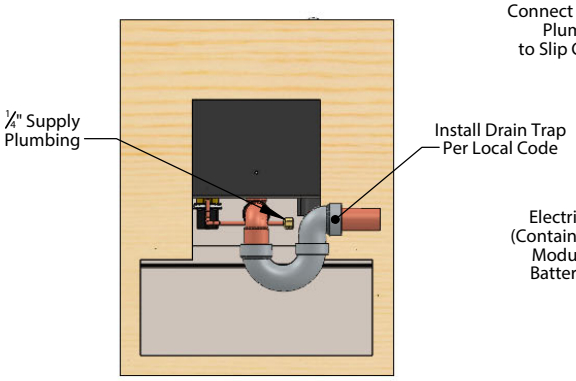
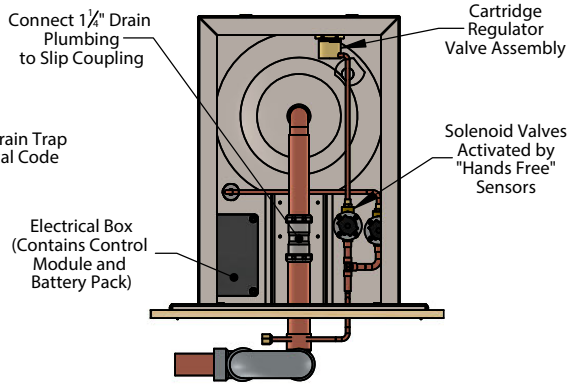
Top View (Cropped)